PoWer TIG Series

GeKaMac®

PoWerTIG 5001 AC DC PULSE

Users Manual

Please Read and Understand This Manual
Before Operating The Welding Machine

www.gedikwelding.com

This machine is for internal use only.

It complies with the WEEE Directive.

This machine has been designed in accordance with the EN 60974-1 and EN 60974-10 standards.

The machine is safe when installation, operation, and maintenance are performed in accordance with the user manual and regulations. The operator and machine owner are responsible for adhering to safety rules.

Gedik Kaynak San. Ve Tic. A.Ş. assumes no responsibility for safety or CE compliance if any modifications are made to the machine or if safety rules are not followed.

This Class A equipment is not suitable for use in homes and similar residential areas where the power supply is provided by the low-voltage public electricity network.

This machine is not household waste and cannot be disposed of in the trash.

When the machine reaches the end of its service life or becomes obsolete, it must be disposed of in accordance with regulations.

COMPLIES WITH THE WEEE DIRECTIVE.

Eco Design Statement

This machine has been designed and manufactured in accordance with the requirements of the 2009/125/EC Eco Design Directive concerning the environmentally friendly design of energy-related products.

Accordingly, machines with an idle mode are as follows.

	Idle Mode
MMA	**X**
MIG	√
TIG	√
Plazma	√
SAW	**Out of Scope**

Efficiency measurements should be conducted only on the power unit. The water cooling system should be disabled. For more information on measurements and machine settings, Gedik Kaynak Sanayi ve Ticaret A.Ş. should be consulted.

Dear Customer

Thank you for choosing our product! This instruction manual will help you get to know your new machine. Read the manual carefully and you will soon be familiar with all the many great features of your new product. Please also take special note of the safety rules in the manual and follow exactly the instructions.

If you treat your product carefully, this definitely helps to prolong its enduring quality and reliability. For more information, please contact us or consult authorized distributor.

The products in the manual may be changed without
prior notice. The model you purchase is :

☐ **GeKaMac PoWerTIG 5001 ACDC PULSE**

Please find corresponding models from the "Contents".

Important:
Please read carefully the safety rules given in the manual and follow exactly the instructions to avoid potential hazard and injury.

Safety Rules

"Danger" indicates an imminently hazardous situation which, if not avoided, will result in death or serious injury.

"Warning!" indicates a possible hazardous situation which, if not avoided, could result in death or serious injury. The possible hazards are explained in the text.

"Caution" indicates a possible hazardous situation which, if not avoided, may result in slight or moderate injury.

"Note!" indicates a situation which implies a risk of impaired welding result and damage to the equipment.

"Important!" indicates practical tips and other useful special-message. It is no signal word for a harmful or dangerous situation.

Utilization for intended purpose only

- The machine may only be used for jobs as defined by the "Intended purpose".
- Utilization for any other purpose, or in any other manner, shall be deemed to be "not in accordance with the intended purpose". The manufacturer shall not be liable for any damage resulting from such improper use.

Safety signs

- All the safety instructions and danger warnings on the machine must be kept in legible condition, not removed, not be covered, pasted or painted cover.

Safety inspection

- The owner/operator is obliged to perform safety inspection at regular intervals.
- The manufacturer also recommends every 3-6 months for regular maintenance of power sources.

Electric shock can kill

- Touching live electrical parts can cause fatal shocks or severe burns. The electrode and work circuit is electrically live whenever the output is on. The input power circuit and machine internal circuits are also live when power is on. In MIG/MAG welding, the wire, drive rollers, wire feed housing and all metal parts touching the welding wire are electrically live. Incorrectly installed or improperly grounded equipment is a hazard.
- Do not touch live electrical parts of the welding circuit, electrodes and wires with your bare skin or wet clothing.
- The operator must wear dry hole-free insulating welding gloves and body protection while performs the welding.
- Insulate yourself from work and ground using dry insulating protection which is large enough to prevent you full area of physical contact with the work or ground.
- Connect the primary input cable according to rules. Disconnect input power or stop machine before installing or maintenance.
- If welding must be performed under electrically hazardous conditions as follow: in damp locations or wearing wet clothing; on metal structures such as floors, gratings, or scaffolds; when in cramped positions such as sitting, kneeling, or lying; or in occasion when there is a high risk of unavoidable or accidental contact with the work piece or ground. Must use additional safety precautions: semiautomatic DC constant voltage (wire) welder, DC manual (Stick) welder and AC welder with reduced open-load voltage.
- Maintain the electrode holder, ground clamp, welding cable and welding machine in good, safe operating condition. Replace damaged part immediately.

Electric and magnetic fields (EMF) may be dangerous

- If electromagnetic interference is found to be occurring, the operator is obliged to examine any possible electromagnetic problems that may occur on equipment as follow:

- minas, signal and data-transmission leads
- IT and telecoms equipment
- measurement and calibration devices
- Wearers of pacemakers

- Measures for minimizing or preventing EMC problems:

– Mains supply

If electromagnetic interference still occurs, despite the fact that the mains connection in accordance with the regulations, take additional measures

– Welding cables

Keep these as short as possible

Connect the work cable to the work piece as close as possible to the area being welded.
Lay tem well away from other cables.
Do not place your body between your electrode and work cables.

- Equipotential bonding
- Workpiece grounding (earthing)
- Shielding

Shield the entire welding equipment and other equipment nearby.

ARC rays can burn

- Visible and invisible rays can burn eyes and skin.
- Wear an approved welding helmet or suitable clothing made from durable flame-resistant material (leather, heavy cotton, or wool) to protect your eyes and skin from arc rays and sparks when welding or watching.
- Use protective screens or barriers to protect other nearby personnel with suitable, non-flammable screening and/or warn them not to watch the arc nor expose themselves to the arc rays or to hot spatter or material.

Fumes and gases can be dangerous

- Welding may produce fumes and gases, breathing these fumes and gases can be hazardous to your health.
- When welding, keep your head out of the fume. If inside, ventilate the area at the arc to keep fumes and gases away from the breathing zone. If ventilation is not good, wear an approved air-supplied respirator.
- Work in a confined space only if it is well ventilated, or while wearing an air-supplied respirator.
- Welding fumes and gases can displace air and lower the oxygen level causing injury or death. Always use enough ventilation, especially in confined areas, to insure breathing air is safe.

Welding and cutting sparks can cause fire or explosion

- When not welding, make sure the electrode circuit is not touching the work or ground. Accidental contact can cause sparks, explosion, overheating, or fire. Make sure the area is safe before doing any welding.
- Welding and cutting on closed containers, such as tanks, drums, or containers, can cause them to blow up. Make sure proper steps have been taken.
- When pressure gas is used at the work site, special precautions are required to prevent hazardous situations.
- Connect work cable to the work as close to the welding zone as practical to prevent welding current from passing too long and creating fire hazards or overheat.
- Wear oil-free protective garments such as leather gloves, heavy shirt, cuffless trousers, high shoes, and a cap. Wear ear plugs when welding out of position or in confined places. Always wear safety glasses with side shields when in a welding area.
- Be attention that welding sparks and hot materials from welding can easily go through small cracks and openings to adjacent areas and start a fire. Remove fire hazardous from the welding area, if not possible, cover them thoroughly. Do not weld where flying sparks can strike flammable material and where the atmosphere may contain flammable dust, gas, or liquid vapors (such as gasoline).
- Protect yourself and others from flying sparks and hot metal. Remove any combustibles from operator before perform any welding.
- Keep a fire extinguisher readily available.
- Empty containers, tanks, drums, or pipes which have combustibles before perform welding.
- Remove stick electrode from electrode holder or cut off welding wire at contact tip when not in use.
- Apply correct fuses or circuit breakers. Do not oversize or bypass them.

Cylinder can explode if damaged

- Pressure gas cylinders contain gas under high pressure. If damaged, a cylinder can explode. Since gas cylinders are normally part of the welding process, be sure to treat them carefully.
- Cylinders should be located away from areas where they may be struck or subjected to physical damage. Use proper equipment, procedures, and sufficient number of persons to lift and move cylinders.
- Always install cylinders in an upright position by securing to a stationary support or cylinder rack to prevent falling over or tipping.
- Keep a safe distance from arc welding or cutting operations and any other source of heat, sparks, or flame.
- No touching cylinder by welding electrode, electrode holder or any other electrically “hot” parts. Do not drape welding cables or welding torches over a gas cylinder.
- Use only correct compressed gas cylinders, regulators, hoses, and fittings designed for the process used; maintain them and associated parts in good condition.
- Use only compressed gas cylinders containing the correct shielding gas for the and properly operating regulators designed for the gas and pressure used. All hoses, fittings, etc. should be suitable for the application and maintained in good condition.
- Open the cylinder valve slowly and keep your head and face away from the cylinder valve outlet.
- Valve protection caps should be kept in place over valve expect when the cylinder is in use or

connected for use.

Hot parts can burn

- Do not touch hot parts with bare hand or skin.
- Ensure equipment is cooled down before perform any work.
- If touching hot parts is needed, use proper tools and/or wear heavy, insulated welding gloves and clothing to prevent burns.

Flying metal or dirt can injure eyes

- When welding, chipping, wire brushing, and grinding can cause sparks and flying metal. It can hurt your eyes.
- Remember wear appropriate safety glasses with side shields when in welding zone, even under your welding helmet.

Noise can damage hearing

- Noise from some processes or equipment can damage hearing.
- Remember wear approved ear protection to protect ears if noise level is high.

Moving parts can injure

- Stay away from moving parts such as fans.
- Stay away from pinch points such as drive rolls.
- Keep all doors, panels, covers, and guards closed and securely in place.
- Have only qualified persons remove doors, panels, covers, or guards for servicing and maintenance.
- Reinstall doors, panels, covers, or guards when servicing and maintenance is finished and before reconnecting input power.

Overuse can cause overheating

- Use machine follow duty cycle. Reduce current or reduce duty cycle before starting to weld again.
- Allow cooling period.
- Do not block or filter airflow to unit.

Static can damage PCB

- Always wear wrist straps before touching PCB or parts.
- Use proper static-proof bags and package to store or move PCB.

Safety markings

- Equipment with CE-markings fulfils the basic requirements of the Low-Voltage and Electromagnetic Compatibility Guideline (e.g. relevant product standards according to EN 60974.1).

Safety markings

- The equipment with the CCC mark meets the basic requirements stipulated in the Chinese standards GB / T15579.1-2013 and GB / T8118.

Safety markings

- This marking means that the product is certified for both the U.S. and Canadian markets, to the applicable U.S. and Canadian standards. The preferred location of the indicators is as shown.

Contents

1-GENERAL REMARKS 6
1-1 Power source features 6
1-2 Functional principle 6
1-3 Output characteristics 6
1-4 Duty cycle 7
1-5 Applications 7
1-6 Warning label 8
2-VERSIONS BRIEFS 8
3-BEFORE COMMISSIONING 9
3-1 Utilization for intended purpose only 9
3-2 Machine installation rules 9
3-3 Power source connection 9
3-4 Welding cables instruction 9
4-GeKaMac PoWerTIG 5001 ACDC PULSE 11
4-1 System components 11
4-2 Basic equipments for welding 11
4-3 Control panel 11
4-4 Sub menu 17
4-5 Save and Call (Sub menu-Channel parameter) 18
4-6 Other function 20
4-7 Interface 21
4-8 Installation 22
4-9 Technical data 25
4-10 Disassembly and reassembly 26
5-REMOTE CONTROLLER 28
5-1 Analog remote controller 28
5-2 Digital remote controller 28
6-TROUBLE SHOOTING 30
7-CARE AND MAINTENANCE 31

1-GENERAL REMARKS

1-1 Power source features

This series TIG welding machine includes 500A types, can perform DC TIG, Pulse TIG, AC TIG,AC pulse TIG and SMAW processes. This series welding machines enjoy reasonable static characteristic and sound dynamic characteristic..

Features and benefits:

-MCU controlled technology

-Self-diagnostic function with error code display

-AC square wave and sine wave waveform output

-30 sets of parameters can be stored

-Pre-gas, post-gas, up-slope time, down-slope time, adjustable parameters, easy to control

-Pulse frequency, pulse ratio, pulse width can be adjusted to improve the welding performance

-By adjusting the pulse current, pulse frequency, pulse width, AC current, AC frequency, cleaning ratio and AC offset ratio, the required penetration depth, penetration width and ripple number of the weld can be obtained, and the life of the tungsten electrode can be extended.

-Remote controller or foot pedal is optional.

1-2 Functional principle

This series welding machines apply IGBT HF inverter technology. 3- phase input volt is rectified, then transformed into HF AC by the inverter which includes IGBT, etc., reduced by HF transformer, rectified and filtered by HF rectifier, Then the secondary inverter outputs adjustable low-frequency AC square wave current, then output. After this process, the welding machine dynamic response ability has been greatly improved, size and weight of transformer and reactor are reduced noticeably, and whole machine efficiency has been improved.

The design of control circuit makes the welding machine enjoy strong ability against power grid fluctuation and perfect welding performance. Welding machine has the following features: easy arc-starting, stable arc, good welding seam formation and capability of continuous welding current regulation. The schematic diagram is as shown in Fig. 1-2-1:

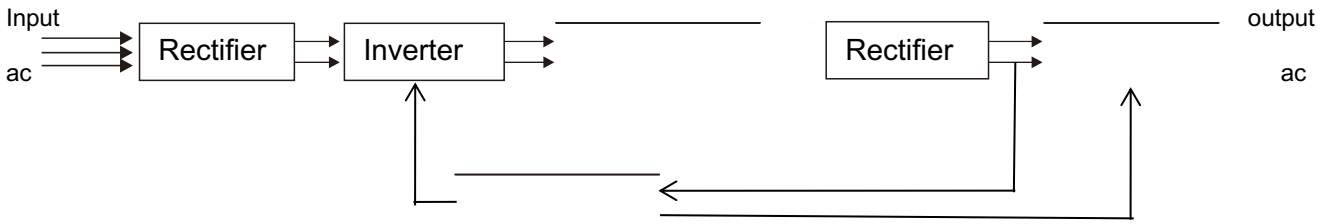

Fig. 1-2-1: Schematic diagram

1-3 Output characteristics

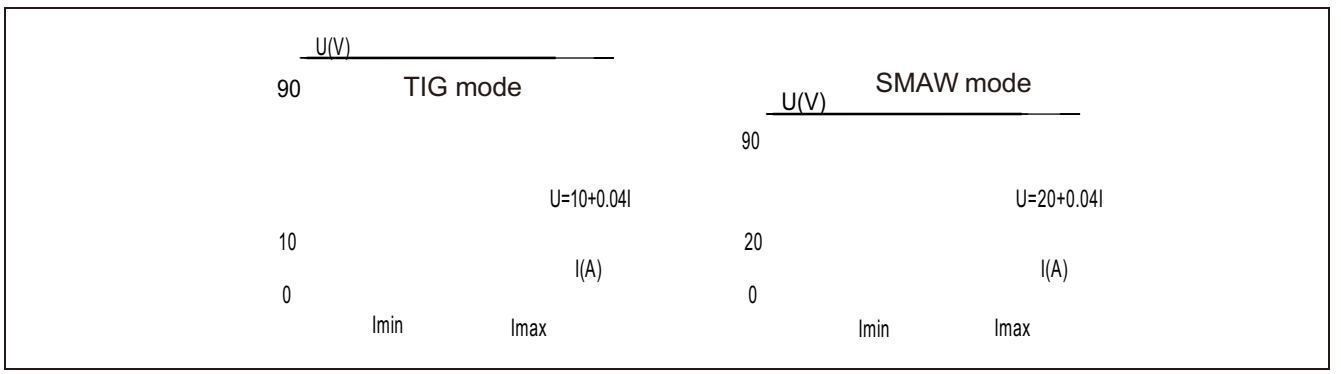

Fig. 1-3-1: Output characteristics

1-4 Duty cycle

Duty cycle is percentage of 10 minutes that a machine can weld at rated load without overheating. If overheats, thermostat(s) will open, output stops. Wait for fifteen minutes for the machine to cool down. Reduce amperage or duty cycle before welding.

Note! Exceeding duty cycle can damage the machine and greatly reduce its lifespan.

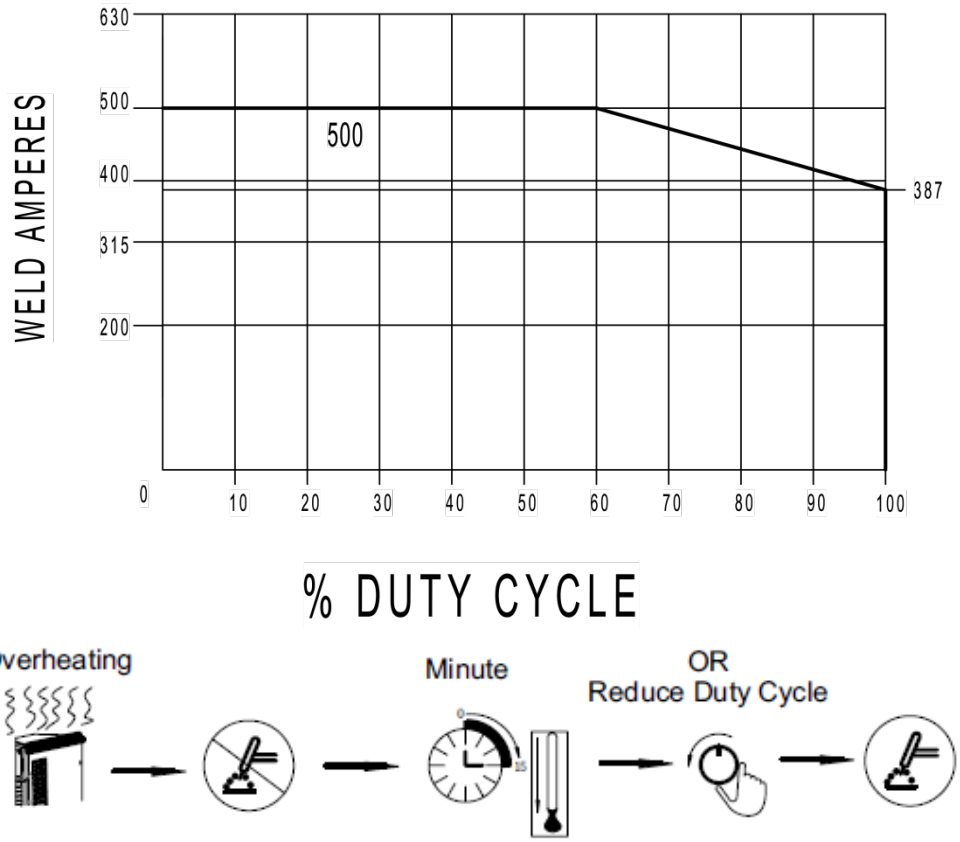

Fig. 1-4-1: Duty cycle

1-5 Applications

This series of machines have many welding processes and can weld most of the metal materials, including carbon steel, stainless steel, copper, titanium, aluminum and Al-Mg alloy etc.

Recommended areas of use are as follows:

- Boiler and container manufacture
- Aerospace industry
- Chemical structure and engineering
- Electric power construction
- Shipbuilding and offshore engineering
- Automobile
- Vehicle manufacture
- Mechanical industry
- Others

1-6 Warning label

The warning label is affixed on the top of machine.

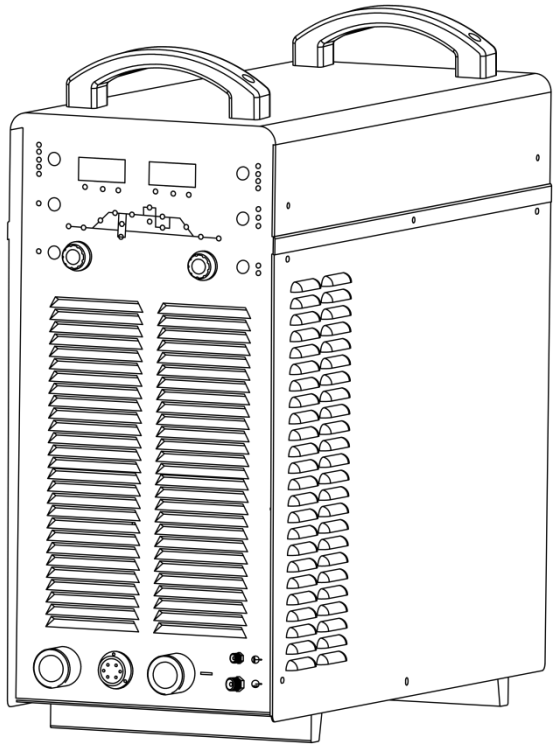

Fig. 1-6-1: Warning label

2-VERSIONS BRIEFS

Professional welding of special materials requires special welding parameters. Different models of the power sources are matched to different welding.

● GeKaMac PoWerTIG 5001 ACDC PULSE

This fully digitized power sources have logically arranged control panel for convenient operation, which can perform SMAW, DC TIG, DC Pulse TIG, AC TIG and AC Pulse TIG.It can use the foot pedal to adjust the current.

3-BEFORE COMMISSIONING

Warning! Operating the equipment incorrectly can cause serious injury and damage. Do not use the functions described here until you have read and completely understood “safety rules”.

3-1 Utilization for intended purpose only

The power source may only be used for SMAW ,TIG. Utilization for other purposes, or in any other manner, shall be deemed to be "not in accordance with the intended purpose". The manufacturer shall not be liable for any damage resulting from such improper use. Operate, inspect and maintain should follow all the instructions given in this manual.

3-2 Machine installation rules

According to test, protection degree of this power source is IP21S. However, the internal key components must be protected from direct soaking.

Warning! A machine that topples over or falls from its stand can cause injury. Place equipment on an even, firm floor in such a way that it stands firmly.

The venting duct is very important for safety protections. When choosing the machine location, make sure it is possible for the cooling air to freely enter and exit through the louvers on the front and back of machine. Any electro conductive metallic dust like drillings must not be allowed to get sucked into the machine.

3-3 Power source connection

- The power source is designed to run on the voltage given on the nameplate.
- The mains cables and plugs must be mounted in accordance with the relevant technical standards.
- The power supply sockets that come with power source are designed to use strictly according to the marked voltages.

Note! Inadequately dimensioned electrical installations can lead to serious damage. The mains lead, and its fuse protection, must be dimensioned in accordance with the local power supply. The technical data shown on the nameplate shall apply.

3-4 Welding cables instruction

When welding, please pay attention to the followings:

a. The welding cables should be kept as short as possible;

b. If extended cable is used, please do as shown in Fig. 3-4-1.

Wrong Coil the excess ground cable and welding cable in same direction respectively.	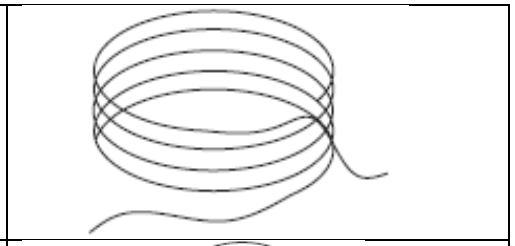
Correct Straighten the ground cable and welding cable and make them close to each other. Bundle the ground cable and welding cable together, running the wires close to the ground.	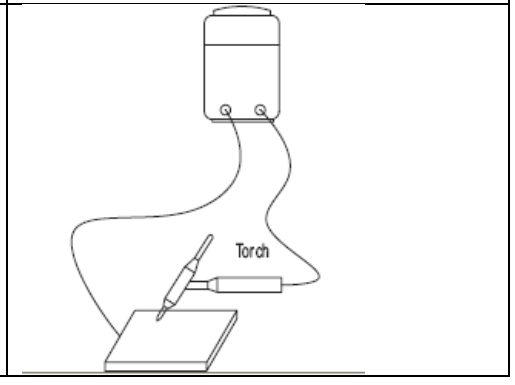

Correct	
When the excess cables are only be used by rolling up, coil the cables to two windings in reverse direction and overlap them. The number of turns for A is same as the number for B. Handle the welding cable and ground cable according to above-mentioned method.	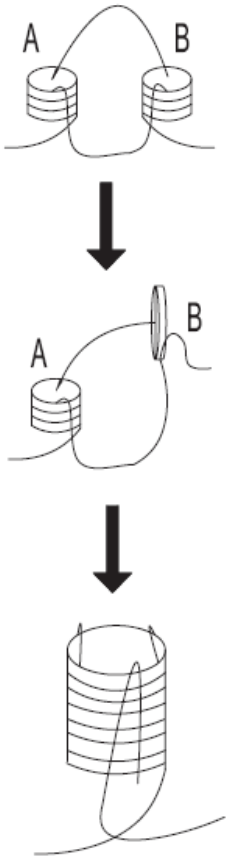

Fig. 3-4-1: Welding cables instruction

4- GeKaMac PoWerTIG 5001 ACDC PULSE

4-1 System components

This welding machine can be equipped with many different accessories and can be used in different special sites with different configurations.

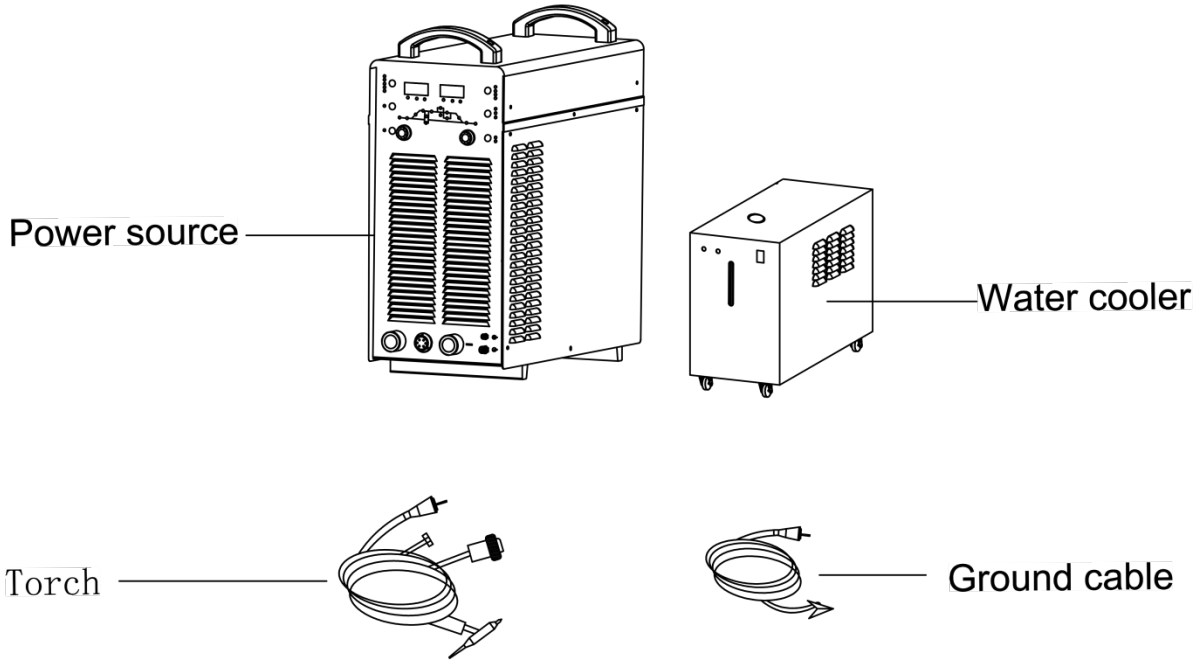

Fig. 4-1-1: System components

4-2 Basic equipments for welding

Only be equipped with the necessary accessories, can the power source operate well. The following is the needed accessories list.

TIG welding

-Power source
-Water cooling machine
-Ground cable
-TIG welding torch
-Gas regulator, gas hose, gas cylinder (to supply the machine with shielding gas)
-Welding wire

STICK welding

-Power source
-Ground cable
-Electrode holder
-Electrode

4-3 Control panel

Note! You may find that your machine has certain functions or some parameters that are not described in this operating manual. Also, certain illustrations may be very slightly different from the actual controls on your machine.
However, these controls function in exactly the same way.

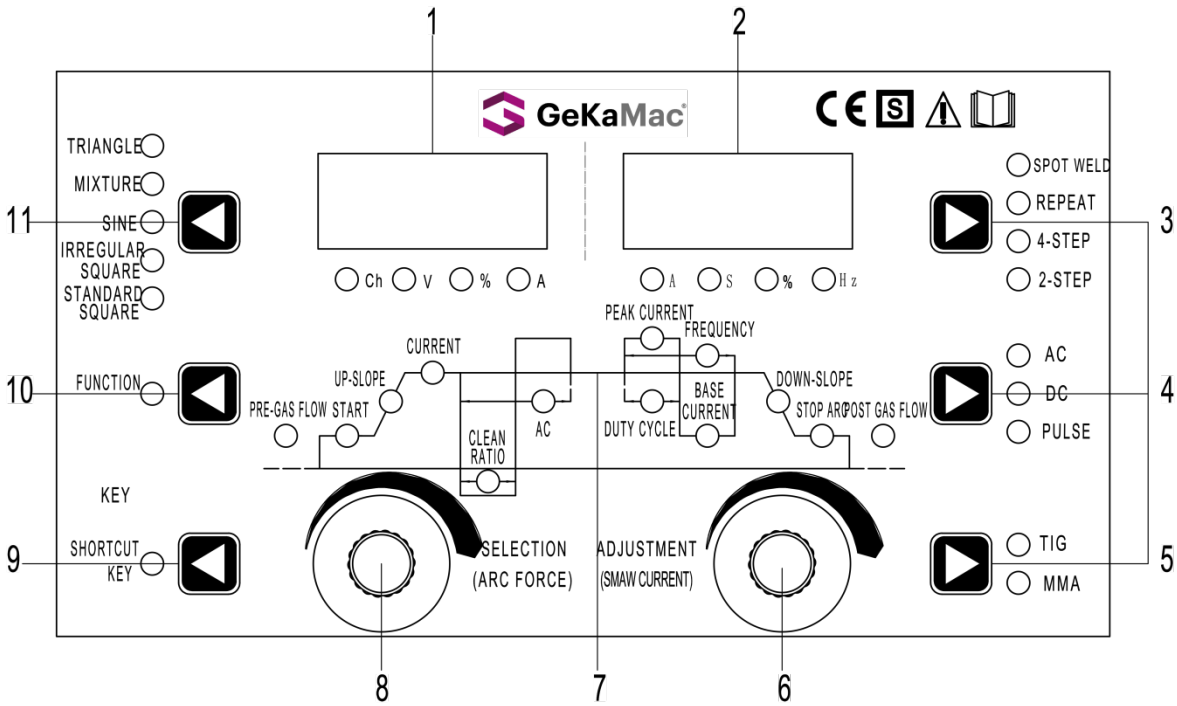

Fig. 4-3-1: Control panel

1.Left displayer

Used for displaying the welding current, voltage and other parameters. If different parameters are selected, the relevant indicator will light up.

2.Right displayer

Used for displaying the welding current, frequency and other parameters. If different parameters are selected, the relevant indicator will light up.

3.Torch operation button

In TIG mode, press this button to switch 2-STEP ,4-STEP,repeat and spot welding operation mode, the indicator will light up accordingly.

Torch operation mode:

Legend:

Fig. 4-3-2: Press torch trigger Fig. 4-3-3: Hold torch trigger Fig. 4-3-4: Release torch trigger

2-STEP operation mode

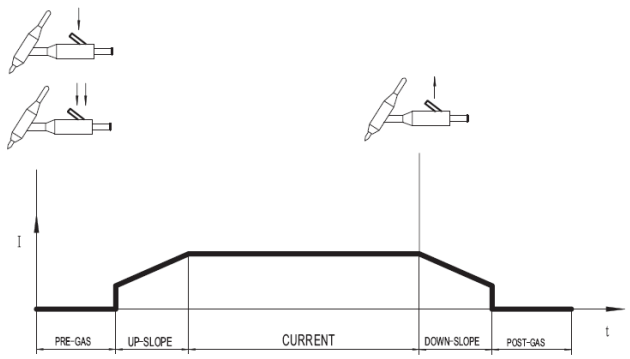

Fig. 4-3-5: 2-STEP operation mode

4-STEP operation mode

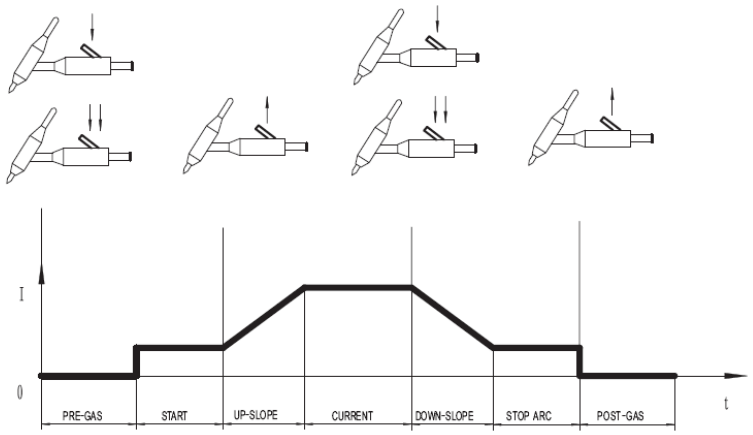

Fig. 4-3-6: 4-STEP operation mode

Repeat operation mode

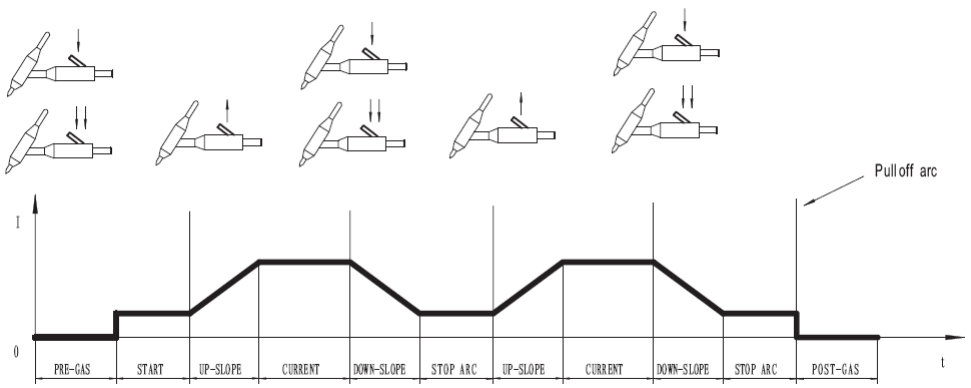

Fig. 4-3-7: Repeat operation mode

Spot welding operation mode

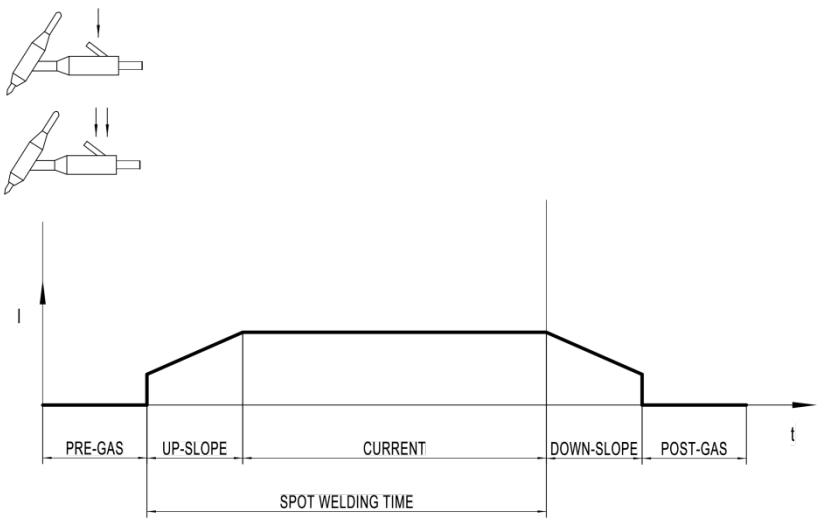

Fig. 4-3-8: Repeat operation mode

4.AC/DC and pulse button

Press this button to switch AC TIG, DC TIG,DC PULSE TIG and AC PULSE TIG mode, the indicator will light up accordingly.

5.TIG/MMA button

Press the button to switch between TIG and MMA, the indicator for the selected progress will light up.

6.Welding parameters:

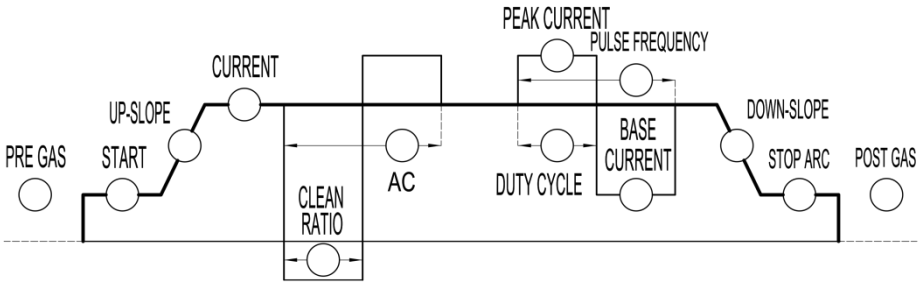

Fig. 4-3-9: Parameters

Parameters	Description	Unit	Setting range	Factory setting
PRE GAS	Time of gas flow before welding	Sec	OFF~10.0	0.2
START	The initial current after the arc is started	A	8~500	50
UP-SLOPE	Time of starting current is increased until it reaches welding current	Sec	OFF~10.0	0.1
CURRENT	Welding current while in the SMAW and CC TIG mode	A	8~510	100
CLEAR RATIO	Time proportions of clean current in AC mode	%	-50～+40%	0
AC FREQUENCY	The frequency of welding current in AC mode	Hz	40-250	60
PEAK CURRENT	Welding current while in the DC Pulse TIG mode	A	8~510	100
DUTY CYCLE	The time proportion of peak current in single cycle under pulse mode	%	15-85	40
FREQUENCY	The frequency of welding current in pulse mode	Hz	DC:0.2~999 AC:0.2~250	4.0
BASE CURRENT	The arc maintenance current in pulse mode	A	8~510	20
DOWN-SLOPE	Time of welding current is continuously lowered until it reaches final current	Sec	OFF~15	0.4
STOP ARC	The current before arc blowout	A	8~500	50
POST GAS	Time of gas flow after arc blowout	Sec	OFF~60	15.0

Table. 4-3-1: Parameter list

7.ADJUSTMENT knob

In TIG mode, it is used for adjusting the parameters that are described in 6. When a parameter is selected by SELECTION knob, rotate this knob clockwise to increase the selected parameter; rotate this knob anticlockwise to decrease the selected parameter. Press this button and turn to left or right for quick adjustment;

In SMAW mode, it is used for adjustment value of welding current.

8.SELECTION knob

In TIG mode, it is used for selecting the parameters that are described in 6. Rotate clockwise to select parameter from left to right; rotate anticlockwise to select parameter from right to left.

In SMAW mode, it is used for selecting arc force current (factory setting 20A,range 10-200A).

Important! Thanks to the microprocessor control, the following functions can be realized:

All parameters that have been set can be automatically stored and will retain until the next time they are changed. This is true even if the power source is switched off and on again in the meantime.

9.F/S button

Press the button to select fast or slow adjustment mode

Slow adjustment - Press the button and the indicator is light up to enter into slow adjustment mode, and all the parameters can be adjusted.

Fast adjustment - Press the button and the indicator is light off to enter into fast adjustment mode. The parameters can be

adjusted by selection knob and adjustment knob. For adjustable parameters, please see below table, other parameters are sub-menu parameters and can't be adjusted.

Process	Parameter selection knob	Parameter adjustment knob
DC		CURRENT
DC pulse	DUTY CYCLE	PEAK CURRENT
AC	CLEAN RATIO	CURRENT
AC pulse	DUTY CYCLE	PEAK CURRENT
SMAW	ARC FORCE	CURRENT

Table 4-3-1: Fast adjustment

10.Fn/Gas test button

Press the button (release it within 5s) and the indicator lights up to enter into sub-menu interface; Press the button again(release it within 5s) and the indicator lights off to exit from sub-menu interface. Please refer to 4-4 submenu.

Press the button (for more than 5s) and release it to enter gas test, the gas valve starts to flow of shielding gas and stop automatically after 30s to exit from gas test. Press the button again within 30s to stop flow of shielding gas and exit from gas test.

11.AC waveform button

In AC TIG mode, press the button to select standard square wave, irregular square wave, sine wave, mixture wave or triangle wave, and the relevant indicator will light up.

Standard square wave-Responsive arc with fast zero crosses and reduced peak current. Stable arc with good puddle control and fast travel speed, Minimizes tungsten super heating.

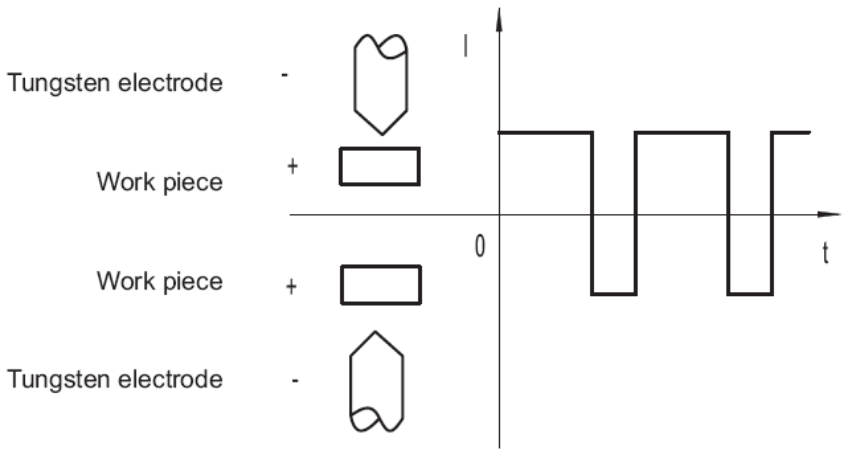

Fig. 4-3-10: Standard square waveform

Irregular square wave: Stronger arc with slow zero crosses and lose noise; the strongest arc and deep penetration, less noise.

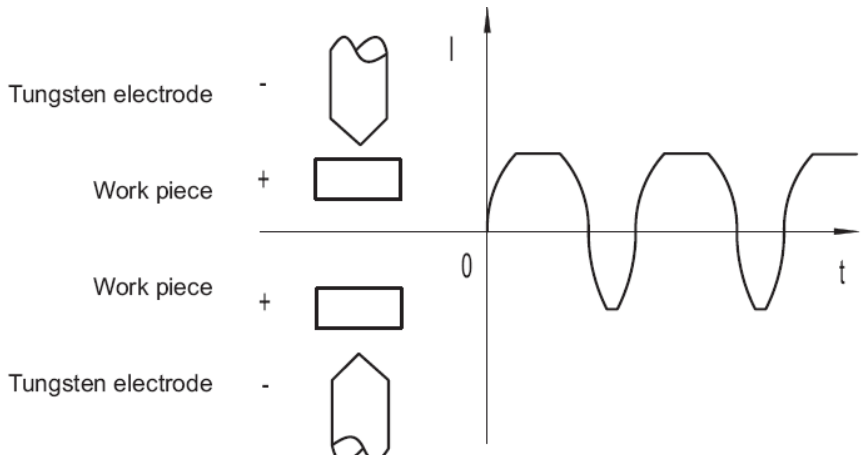

Fig. 4-3-11: Irregular square wave

Sine wave-Traditional smooth shaped waveform. Soft arc and less noise. Good for wide seam.

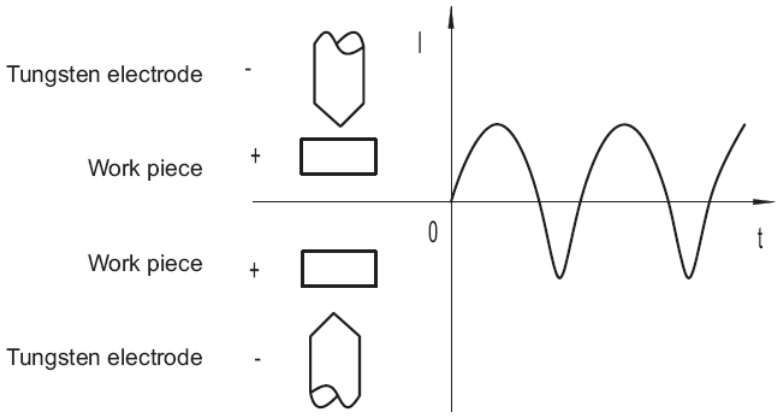

Fig. 4-3-12: Sine waveform

Triangle wave: Minimized area (heat) under the curve shape with high peaks. Lower amperage can minimize heat input to the weld High peaks more forceful for anodized applications.

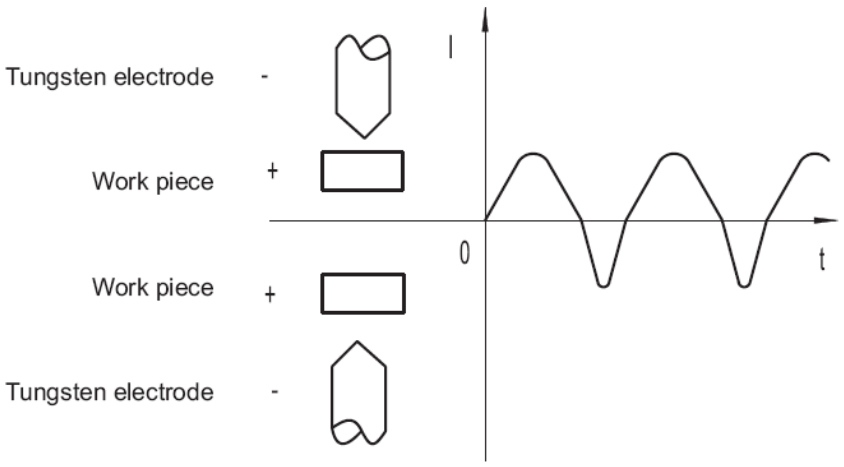

Fig. 7-3-13: Triangle wave

Mixture wave: Alternate output AC current and DC current, high Efficiency. (Fig. 7-3-14)

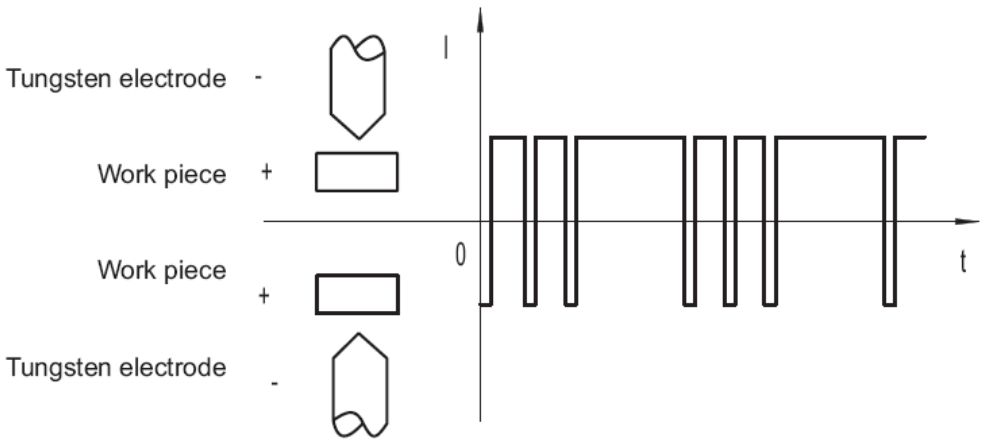

Fig.4-3-14: Mixture wave

4-4 Sub menu

4-4-1 Sub menu parameter

Process	Sub-menu Parameter	Code	Setting range	Default value
TIG	Tungsten electrode diameter	ELd	0.8～6.0(mm)	2.0mm
	AC waveform	nSt	0-1	0
	Water cooling	H2O	ON	ON
			OFF	
	Channel selection	CHA	n0～n29	n0
	HF selection	HF	on	on
			oFF	
	Arc-start polarity(DC TIG mode)	P～S	PoS	nEG
			nEG	
	Spot welding time	SPt	OFF~10.0(s)	0.1s
SMAW	Hot start current	HCu	20~200(A)	50A
	Hot start time	Hti	0.1~2.0(s)	0.5s
	Knee point voltage	UIn	15~30(V)	15V
Timing function		t-L	0000:00~ 9999:59	000
		t-H		000
Factory setting		FAC	no	YES
			YES	

Table. 4-4-1: parameters list

4-4-2 Enter and exit sub menu

Press the" Fn" button (release it within 5s) and the indicator lights up to enter into sub-menu interface; Press the "Fn" button again(release it within 5s) and the indicator lights off to exit from sub-menu interface. Select parameter code by selection knob，adjustment parameter value by adjustment knob.

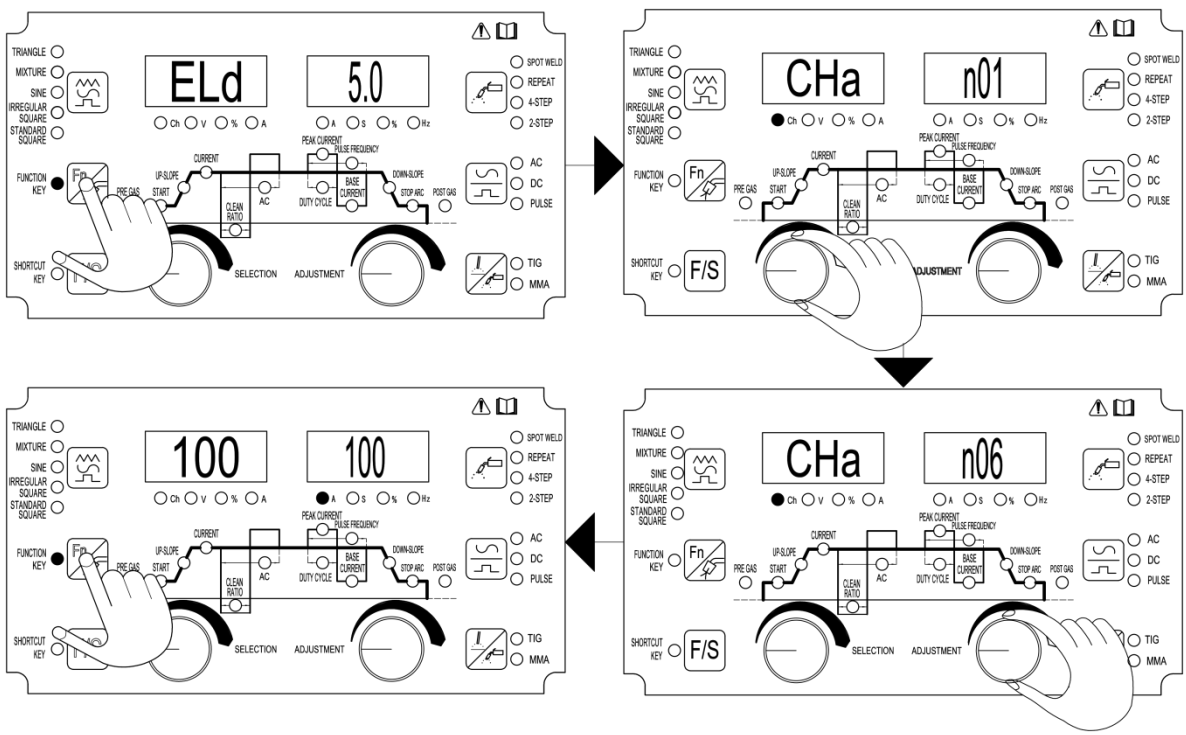

Fig. 4-4-1: Sub menu operation

4-5 Save and Call (Sub menu-Channel parameter)

The welders need to write down technical parameters for some repeated jobs. Thanks to this function, up to 30 job records can be stored and loaded.

Save a job

a. Set the parameter to be stored;

b. Press Fn key(release it within 5s) and the indicator lights up to enter into sub-menu interface;

c. Select code "CHA" by selection knob, Select channel No "n0～n29" by adjustment knob;

d. Press AC/DC button for 3s and the channel No is changed from "n0～n29" to "P0～P29", meaning the present job parameter has been stored;

d. Press AC/DC button again (release it within 5s) and the indicator lights off to exit from the sub-menu parameter adjustment, the job creation is completed.

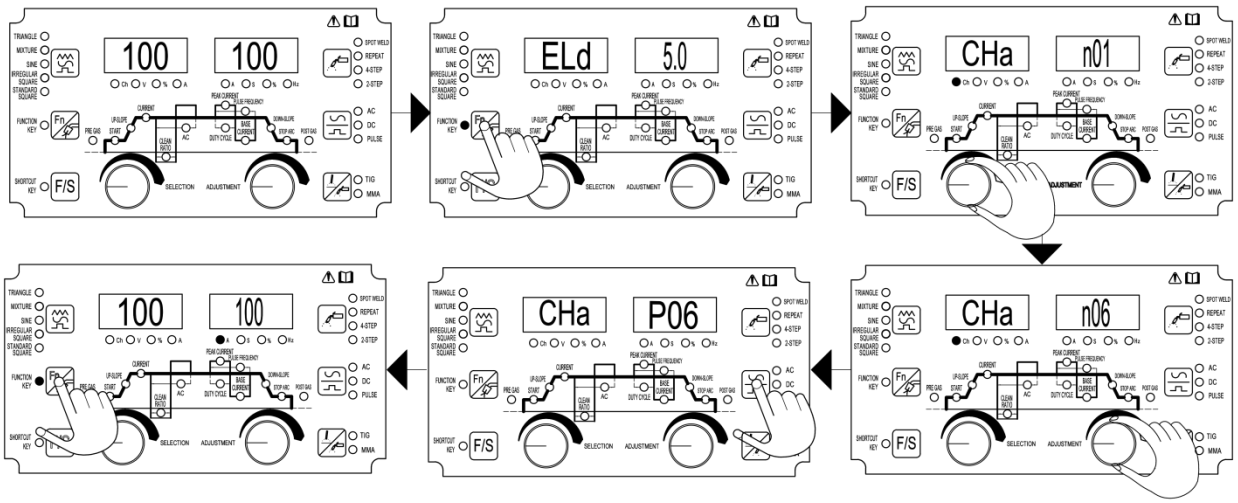

Fig. 4-5-1: Save operation

Call a job

a. Press Fn key(release it within 5s) and the indicator lights up to enter into sub-menu interface;

b. Select code "CHA" by selection knob, Select channel No "P0～P29" by adjustment knob;

c. Press 2-STEP/4-STEP button and Ch indicator lights up, meaning the job parameter which stored in present channel is loaded. At this time, the knobs and buttons on the panel are locked and the present parameters can’t be changed.

e. Press 2-STEP/4-STEP button again (release it within 5s) and the indicator lights off to exit from job loading; the present job parameters can be used for welding and the job loading is completed;

f. In call mode, press 2-STEP/4-STEP button again and Ch indicator lights off, cancel the present call state and the panel is unlocked.

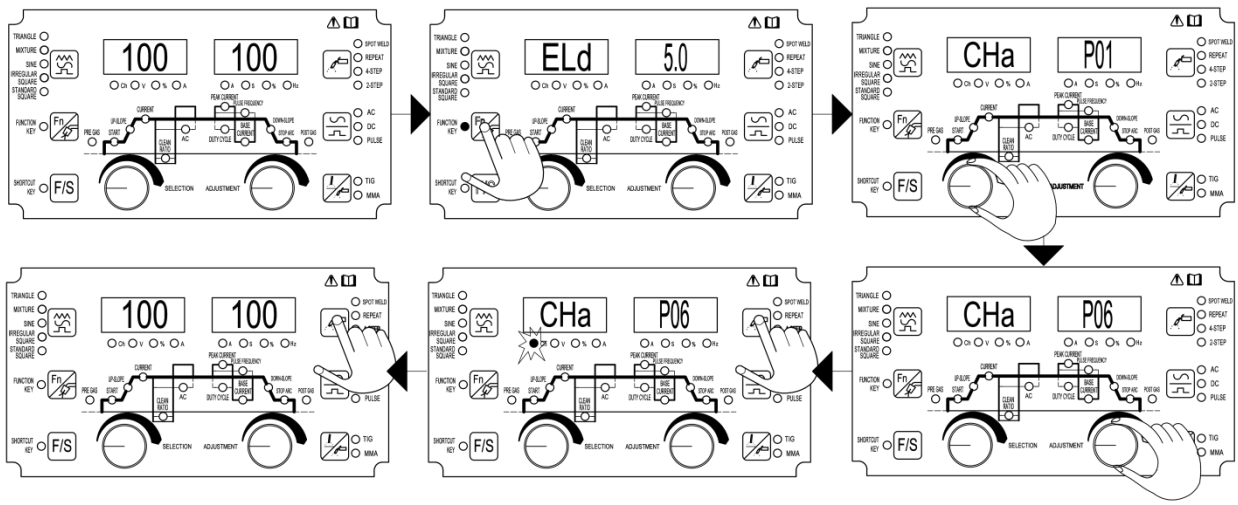

Fig. 4-5-2: Call operation

Delete a job

a. Press Fn key(release it within 5s) and the indicator lights up to enter into sub-menu interface;

b. Select code "CHA" by selection knob, Select channel No "P0～P29" by adjustment knob;

c. Press TIG/MMA button for 5s, the channel No is changed from "P0～P29" to "n0～ n29", meaning the job parameter which is stored in present channel is deleted;

d. Press Fn key(again (release within 5s) and the indicator lights off to exit from “delete job”, the job deletion is completed.

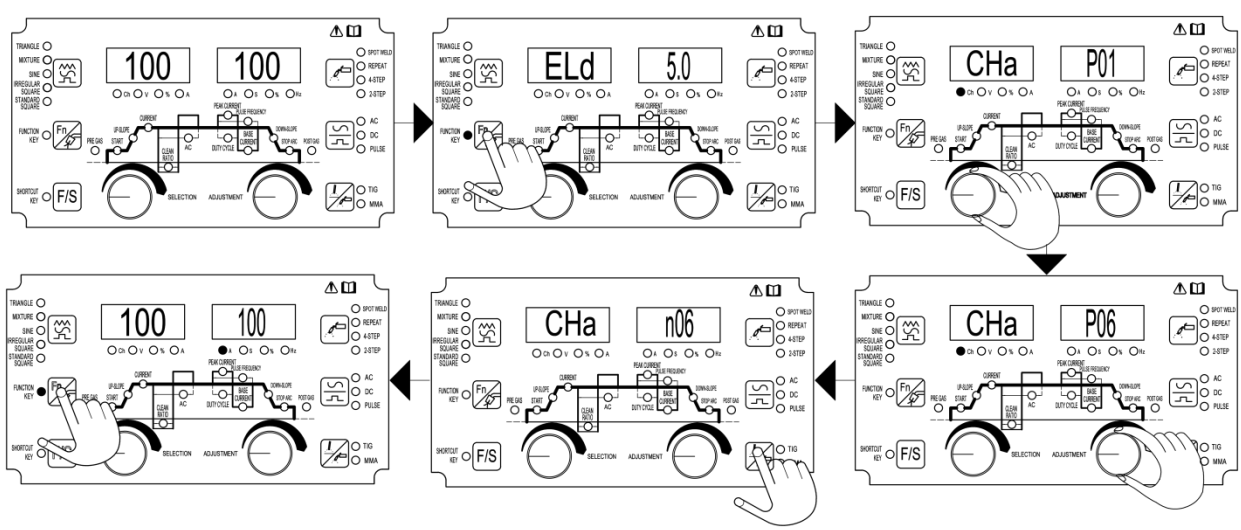

Fig. 4-5-3:Delete operation

4-6 Other function

4-6-1 Timer reset

a. Press Fn key (release with 5s) and the indicator lights up to enter into sub-menu interface;

b. Select code "t-L" or "t-H" by selection knob to check specific value. "t-L" indicates the low-order value and "t-H" indicates the high-order value. Combine both values to read the timing time;

c. If you want to zero clearing the time, press TIG/MMA button for 3s and the value becomes zero;

d. Press Fn key again (release it within 5s) and the indicator lights off to exit from timing function.

Example: If the high-order and low-order are shown as Fig. 4-6-1, meaning the timing time is 9933.20, it is nine thousand nine hundred and thirty-three hours and twenty minutes.

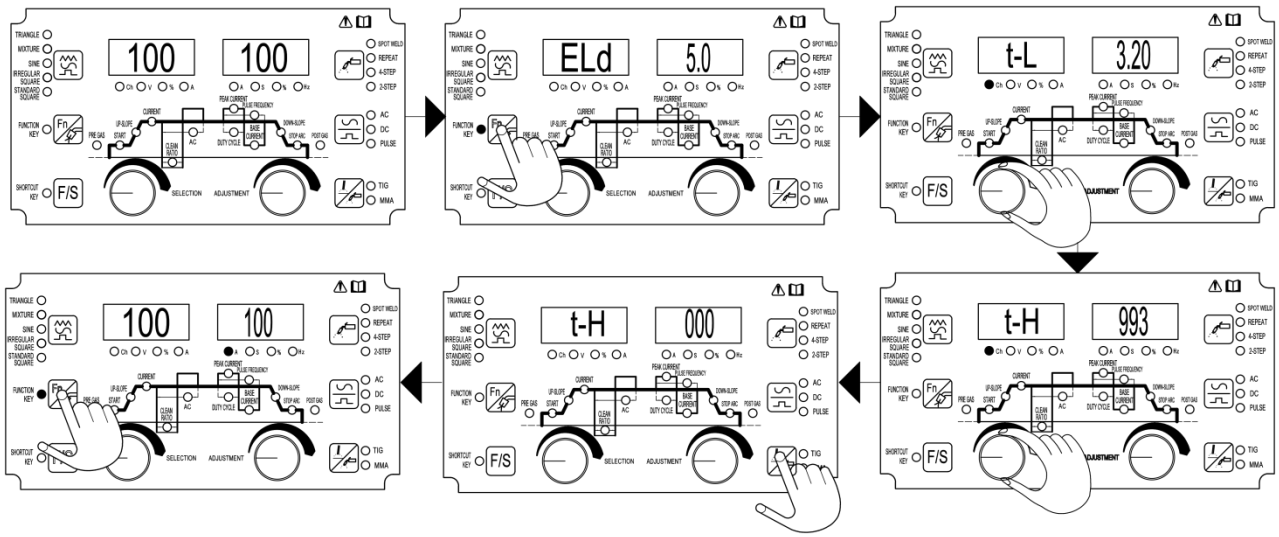

Fig. 4-6-1:Timer Reset

4-6-2 Reset to factory setting

a. Press Fn key (release with 5s) and the indicator lights up to enter into sub-menu interface;

b. Select code "Fac" by selection knob

c. Press TIG/MMA button for 3s and "YES" appears on right-hand displayer, the factory setting is restored.

d. Press Fn key again (release within 5s) and the indicator lights off to exit from factory setting, and the factory setting is completed.

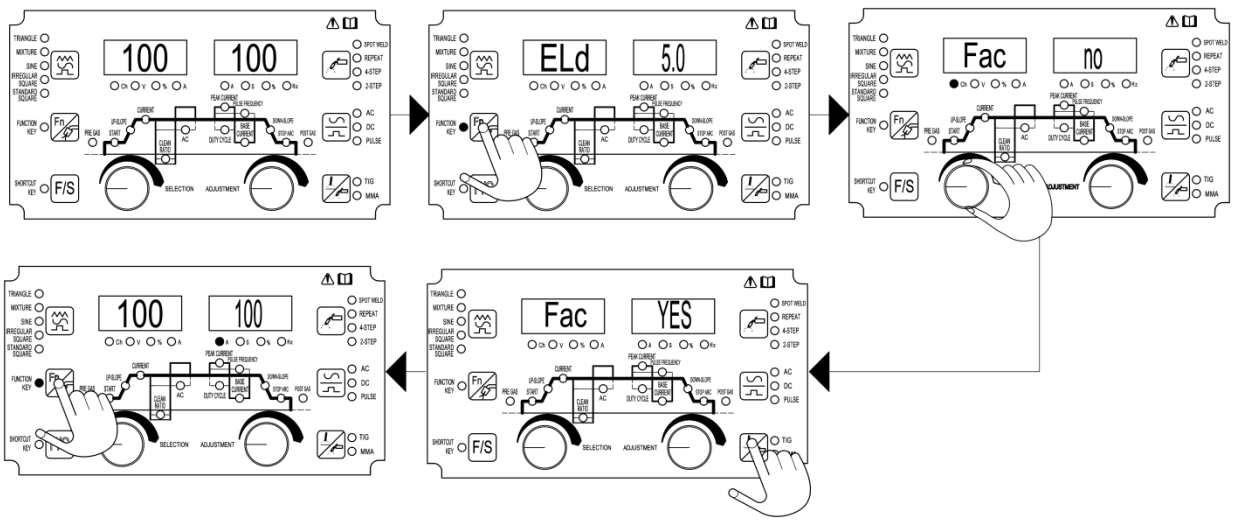

Fig. 4-5-2: Reset to factory setting

4-7 Interface

Note! You may find that your machine has certain functions or some parameters that are not described in this operating manual. Also, certain illustrations may be very slightly different from the actual controls on your machine. However, these controls function in exactly the same way.

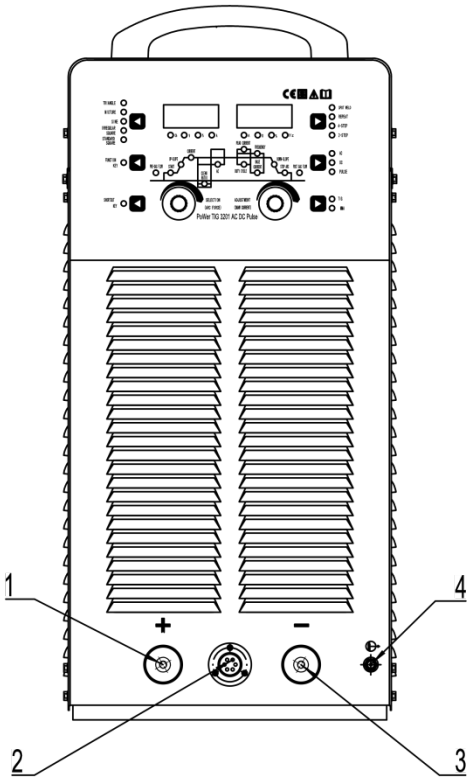

Fig. 4-7-1: Front panel

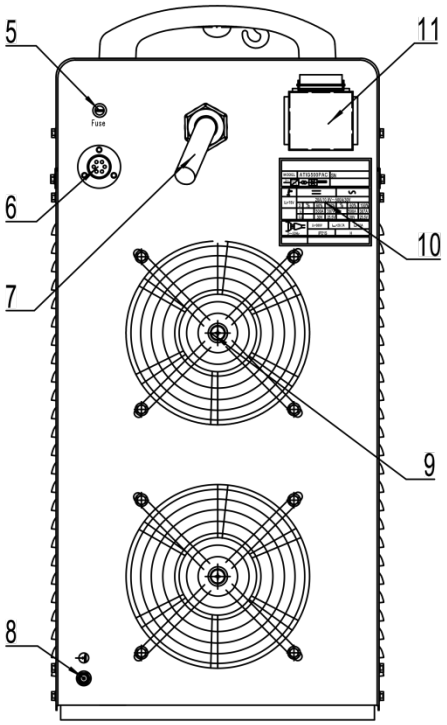

Fig. 4-7-2: Rear panel

1.Quick socket (+)

Connect electrode holder when in SMAW mode;

Connect with the work piece when in TIG mode.

2.Control socket

Connect to torch trigger or foot pedal.

	Pin No.	Description	Pin No.	Description
	1	Torch trigger	4	10VDC
	2	Torch trigger	5	Remote preset current signal
	3	Remote enable(low level)	6	GND

Table. 4-7-1 Description of remote control socket

3.Quick socket (-)

Connect work piece when processing SMAW;

Connect with TIG torch when processing TIG welding.

4.Gas outlet

Connect gas hose of TIG torch.

5.Fuse

6.Reserved

7.Power cord

It is 4-pin cable. The mixed-colored wire must be firmly grounded, the rest wires are connected with corresponding 3-phase

power supply.
8.Gas inlet (part of solenoid valve)
Connect with Argon gas regulator with gas hose.
9.Fan
Cooling down the heating components in the welding machine.
10 Nameplate
11.Circuit breaker
The function of circuit breaker is to protect welding machine and operator by automatic trip to turn-off power supply when overload or short circuit happens to the power source. Normally, the switch flipped to upward means power-on. To start or stop the welding machine is done by the mains switch in the distribution box. Please do not take this circuit breaker as the power switch.

4-8 Installation

● **Installation environment requirements**

1. It should be placed indoors without direct sunlight, rainproof, low humidity and less dust. The ambient air temperature range is -10℃~+40℃.
2. The inclination to the ground should not exceed 10°.
3. There should be no wind in the welding station, if any, it should be covered.
4. The welding machine is more than 20cm away from the wall, and the distance between the welding machine is more than 10cm.
5. When using water-cooled welding torch, pay attention to anti-freezing.

● **Power supply and cable requirement**

Please note the size of fuse and circuit breaker in the table below are for reference only.

Model		500
Input power supply		3 phase, AC400V±10%, 50Hz
Electricity grid min. power (KVA)	Power grid	23
	Generator	36
Input protection(A)	Fuse	40
	Circuit breaker	63
Cable size (mm²)	power cord	≥6
	Output cable	70
	Protective GND wire	≥6

Table 4-8-1: Power supply and cable requirement

Note! Welding machine must be taken special design if it is powered by generator, please contact with manufacturer if you have such needs.

● **connections of power cord and distribution box**

Warning! -Avoid hot-line work

- Operating by professional electrician
- Avoid connecting two power sources to one breaker
- Please refer to Table 6-1 to check if standard of input voltage, breaker and input cable is suitable

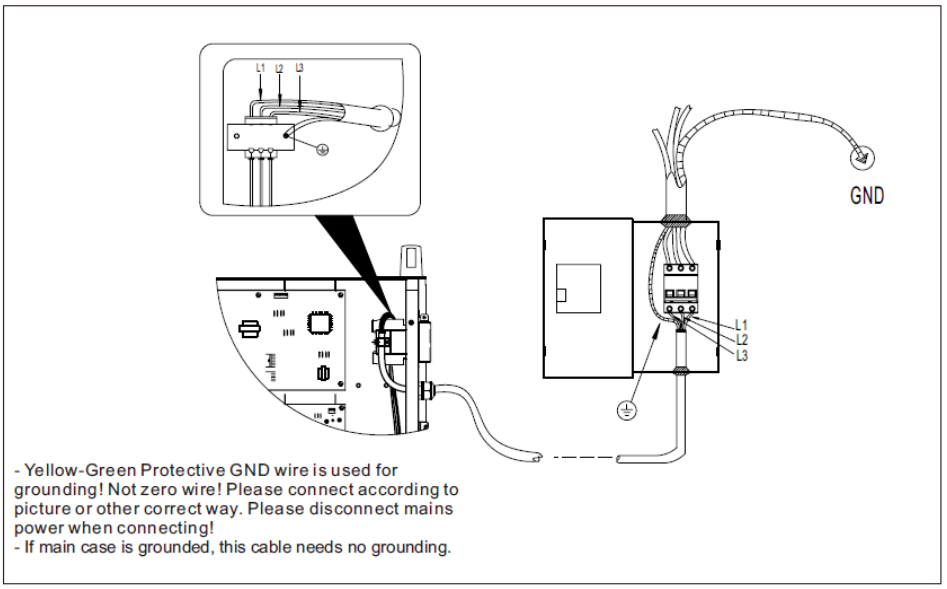

Fig.4-8-1: Connections of power cord and distribution box

●**Gas cylinder installation**

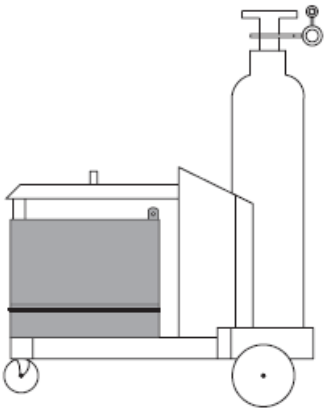

1. Stand the gas cylinder on the trolley and secure it by fixing the cylinder strap around a point in the top third of the cylinder-but never around the neck of the cylinder.
2. Take the protective cap off the gas cylinder.
3. Gently turn the gas-cylinder value anticlockwise, and blow off any dust and dirt.
4. Screw the pressure regulator onto the gas cylinder and tighten it.
5. Connect the shielding-gas connector to the pressure regulator.

Fig. 4-8-2: Gas cylinder installation

●**TIG welding(water cooling)**

Warning! Operating the machine incorrectly can cause serious injury and damage. Do not use the machine until you have read the following

- Safety rules
- Before putting the machine into service

Warning! If the machine is plugged into the mains supply and the mains switch is in "O" position during preparation, there is a high risk of very serious injury and damage. Only carry out preparation when the machine is unplugged from the mains and the mains switch is off.

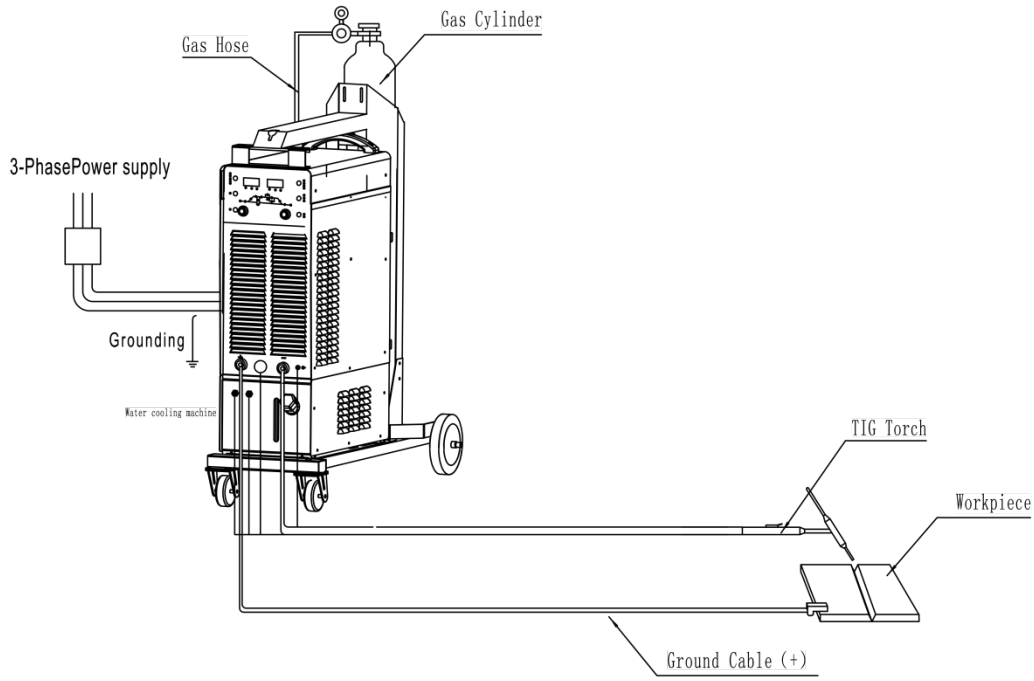

Fig.4-8-3: Connection and operation for gas-cooling TIG welding

●TIG welding(gas cooling)

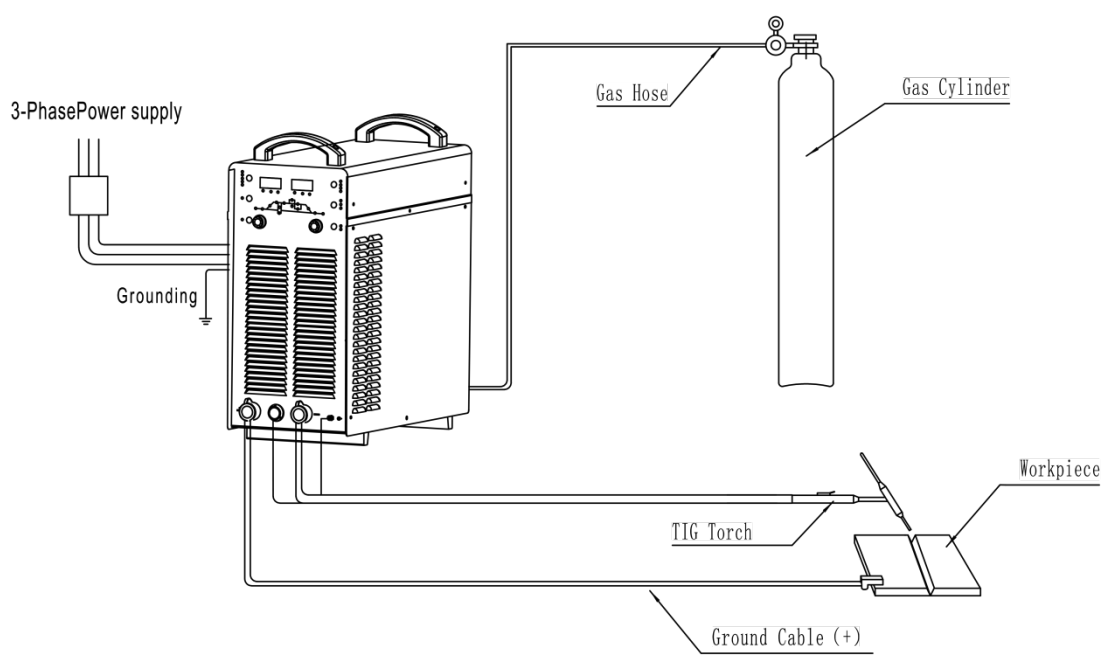

Fig. 4-8-4: Connection and operation for water-cooling TIG welding

●SMAW welding

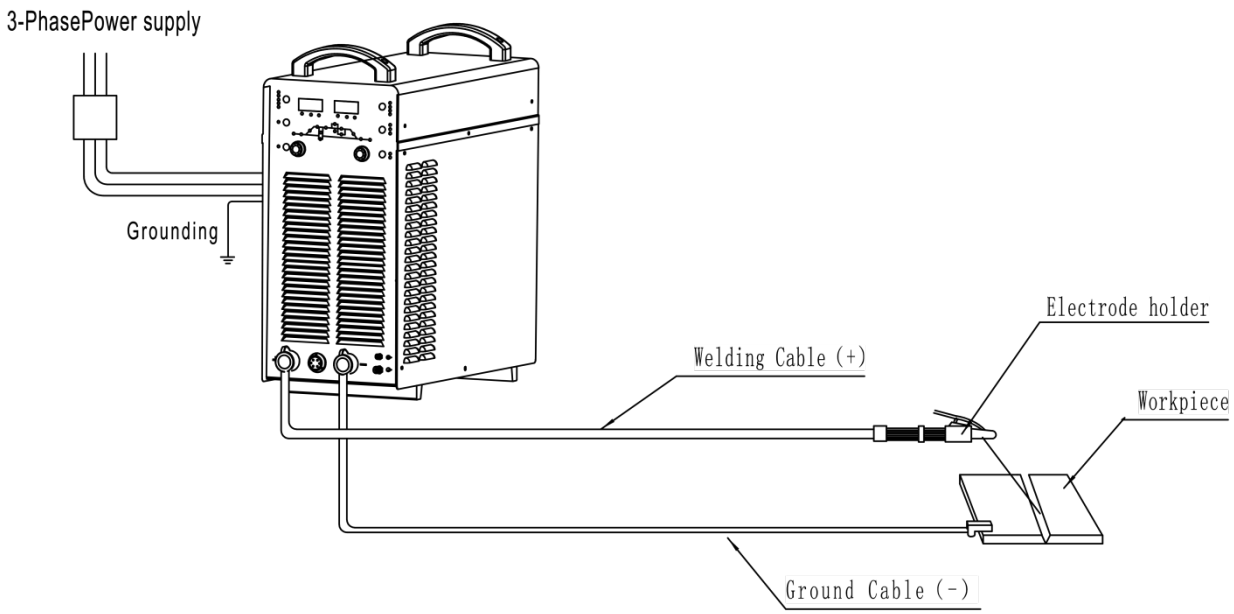

Fig.4-8-5: Connection and operation for SMAW welding

4-9 Technical data

Note! For machines designed for special voltages, below is the technical data on the name plate.
The maximum AC current is when the AC frequency is 50HZ, other frequencies may be different from the actual current.

Model	500
Input voltage/frequency(3~)	AC400V, 50Hz
Rated input capacity (KVA)	26
Rated input current (A)	37
Output current adjustment range (A)	20～500
Duty Cycle (%)	60
OCV (V)	79(TIG)/73(MMA)
Tungsten diameter(mm)	1～6
Electrode diameter(mm)	2～6
Weight (Kg)	70
Insulation class	H
Dimension(mm)	670*350*780

Table 4-9-1 Technical data

4-10 Disassembly and reassembly

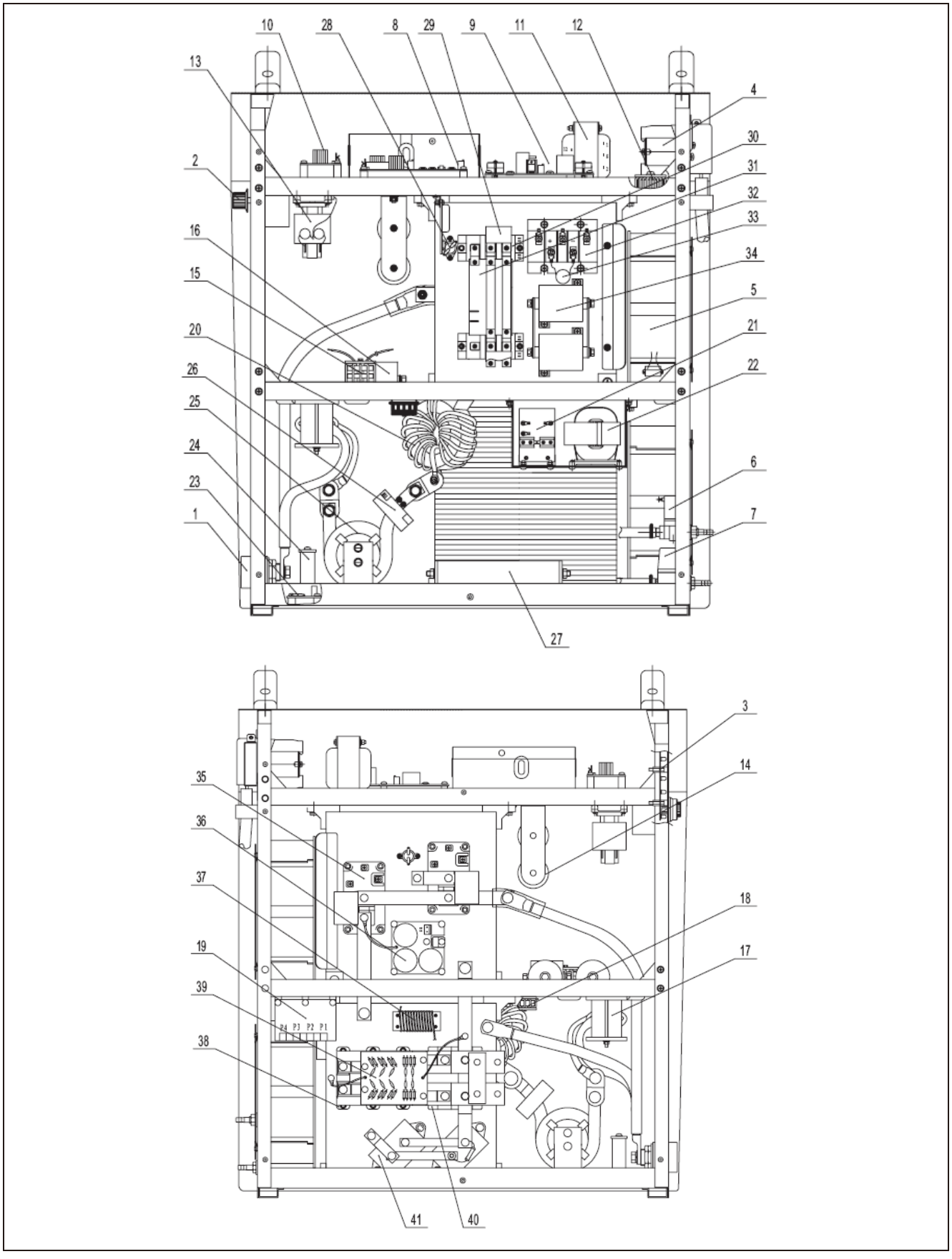

Fig.4-10-1: DRAWING

No.	Item	Stock no.
1	Quick plug	740002-00026
2	Potentiometer	720031-00137
3	Display board	220503-00018
4	Circuit breaker	745011-00022
5	Fan	746001-00087
6	Solenoid valve	752001-00014
7	Water flow switch	745005-00003
8	Main control board	210580-00517
9	Drive board	210310-00032
10	Protection board	210020-00002
11	Power transformer	763001-00052
12	--	--
13	Isolation transformer	763003-00023
14	Power resistor 200W 60Ω	720006-00035
15	Current transformer	220149-00035
16	Polypropylene capacitor 5uf 500V	722001-00074
17	Voltage boosting transformer	220431-00015
18	Charging inductor	220095-00001
19	Charging rectifier board	220089-00004
20	Main transformer	220629-00019
21	Arc starting board	220575-00003
22	High leakage reactance transformer	763003-00018
23	Rack capacitor board	220293-00023
24	Wire-wound resistor 1K 20W	720005-00016
25	Output reactor	763004-00033
26	Current sensor	753001-00011
27	Power resistor 200W 20Ω	720006-00034
28	Temperature relay	745008-00006
		745008-00008
29	Polypropylene capacitor 0.47uf,1200VAC	722001-00067
30	IGBT module	735007-00038
31	IGBT protection board	220005-00135
32	Three phase rectifier board	735005-00003
33	Varistor	720021-00017
34	Polypropylene capacitor 20uf 1400V	722001-00070
35	IGBT module	735007-00024
36	Discharging board	220533-00004
37	Current exchange inductor	220281-00008
38	Fast recovery diode module DKR200AB60	735006-00029
39	Diode protection board	220233-00003
40	Fast recovery diode module FRS300BA50(W)	735006-00053
41	Polypropylene capacitor 40uf 1250VDC	722001-00116

Table.4-10-1: spare parts

5-REMOTE CONTROLLER

5-1 Analog remote controller

The analog remote controller can only adjust the welding current, suitable for GeKaMac*** welding machine.

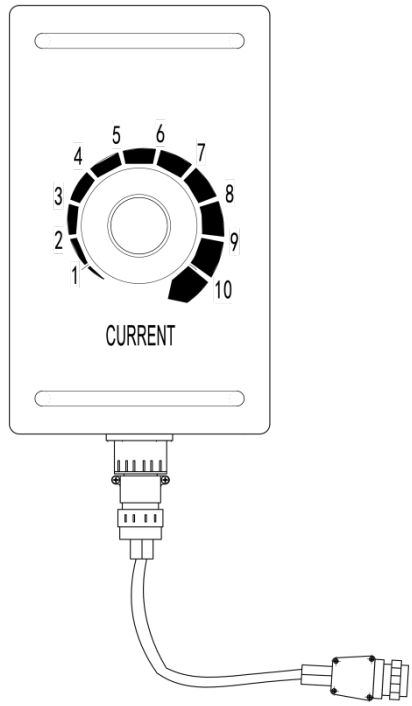

Fig.5-2-1-1:Analog remote controller

5-2 Digital remote controller

Digital remote controller, can adjust various parameters of the welding machine panel, suitable for GeKaMac*** welding machine.

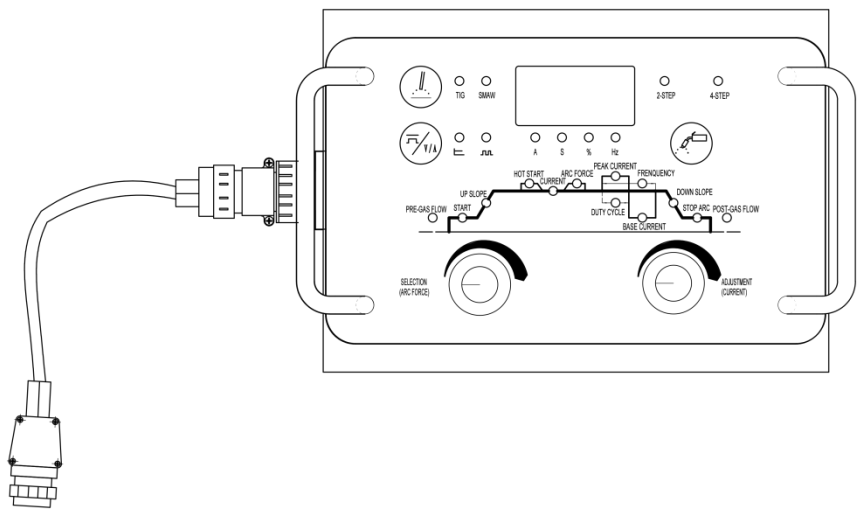

Fig.5-2-1-1: Digital remote controller

5-2-1 Control panel

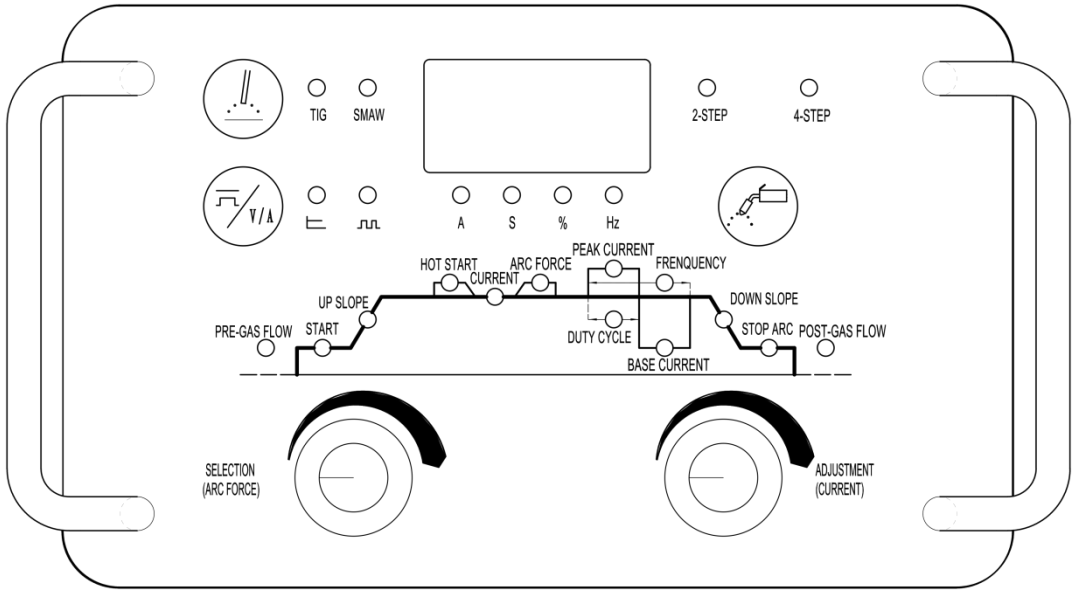

Fig.5-2-2-1: control panel

Please refer to chapter 4-3 of the control panel of the welding machine.

5-2-2 Interface

Connect to welding machine.

Pin No.	Pin No.	Description
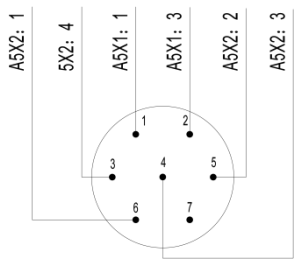	1	38VAC
	2	38VAC
	3	Y
	4	Z
	5	A
	6	B
	7	Null

Table 5-2-2-1 Description of control socket

5-2-3 Spare parts

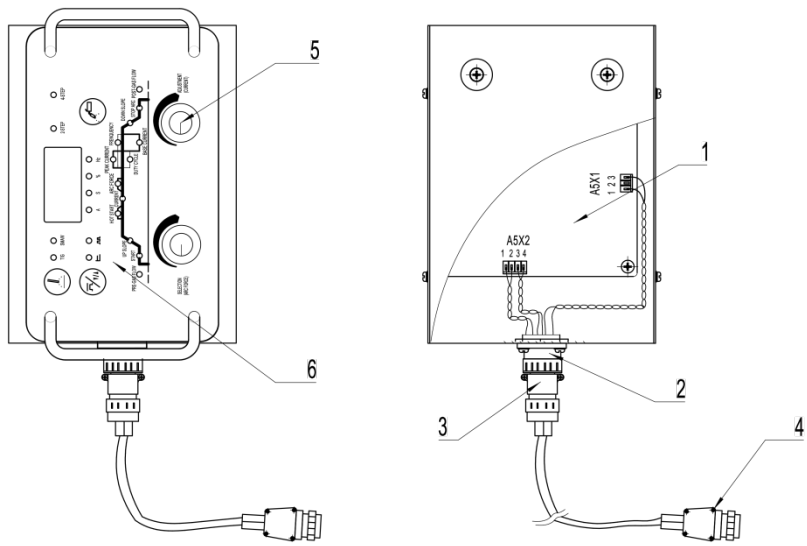

Fig.5-2-3-1:Spare parts

Table.5-

No.	Item	Stock No.	Qty
1	Display board	220503-00071	1
2	Control socket	740001-00034	1
3	Control plug(7pin)	740001-00002	1
4	Control plug(6pin)	740003-00004	1
5	knob		2
6	PC sticker		1

2-3-1 Description of control socket

6-TROUBLE SHOOTING

Warning! An electric shock can be fatal. Before opening the machine:
-Switch it off and unplug it from the mains
-Unplug machine from the mains
-Put up a clearly legible and easy-to-understand warning sign to stop anybody inadvertently switching it back on again
-Check to make sure the electrically charged components (e.g.capacitors) have been discharged.
-Bolt in outer case also works for ground connection. Never use other bolt, which can not work for ground connection.

Machine problem, cause and remedy

Note! The following troubles and causes are uncertain. However, during the process of ATIG-Pac series and the normal using conditions, these might happen.

No.	FAULT	CAUSE	REMEDY
01	Indicator light does not light on and welding machine doesn't work when machine switches on	Default phase	Check power source
		Fuse (2A) is broken	Check whether the fan, power transformer and control board are in good condition
		Wire disconnection	Check and repair
02	Circuit breaker trips automatically except working for a long time in high welding current	IGBT module, three phase rectifier, or output diode module is damaged	Check and replace
		Short circuit	Check and replace
03	Welding current is not stable	Default phase	Check power supply
		Main control board is damaged	Check and replace main control board
04	The welding current is not adjustable	Inner line is broken	Check and replace
		Main control board is damaged	

Table 6-1: Trouble shooting

● **Error code display**

This series of machines have automatic protection and error code display function. Relevant Cause & Remedy can be found according to below Error codes, as shown in Table 6-2

Code	Trouble	Cause	Remedy
E1E	Over voltage	1. The secondary IGBT is damaged 2. The main control board is damaged	Check and replace
E10	Torch trigger fault	No current output after pressing torch trigger for 2s	Release torch trigger
E19	Over-heat protection	The welding machine is over heat; Temperature Relay fault Main control board damaged	Shut down the welding machine and wait for cooling; or replace Temperature Relay
E0A	Water-cooling is abnormal	No circulating water in water cooling system Water flow sensor damaged	Check and repair
E40	Communication is abnormal	1.The communication harness is loose or disconnected 2.The main control board is faulty 3.Display board failure	Check and replace

Table 6-2: Displayed error code

7-CARE AND MAINTENANCE

Before open the machine

Warning! An electric shock can be fatal. Before opening the machine:
- Switch it off and unplug it from the mains
- Put up a clearly legible and easy-to-understand warning sign to stop anybody inadvertently switching it back on again
- Check to make sure the electrically charged components (e.g.capacitors) have been discharged
- Bolts in outer case also work for ground connection. Never use other bolt that can not work for ground connection

Maintenance of welding power source

Please follow the instructions as below to ensure normal use of power source
- Conduct safety check at regular intervals (see “Safety rules”)
- Dismantle machine side panels and clean machine inside with clean and low-pressure compressed air by professional technician, not less than twice per year. Clean the components at a certain distance only
- If a lot of dust has accumulated, clean the cooling-air ducts

Maintenance of water-cooled welding torch

For water cooled welding torch:
- Check the connections of water cooling system
- Check the coolant level, cleanliness of coolant etc. (clean coolant only)
- Frequently check coolant’s back flow state

Daily maintenance

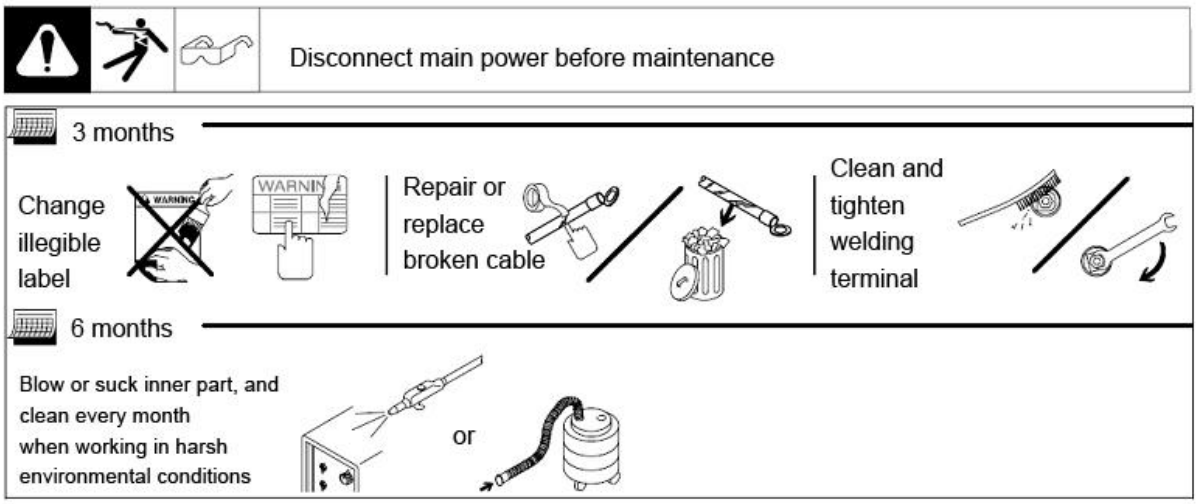

Fig.7-1: Daily maintenance

PoWer TIG Series

GeKaMac®

Gedik Welding Inc.
Ankara Caddesi No: 306 Şeyhli 34906 Pendik - İstanbul / Turkey
P. +90 216 378 50 00 • **F.** +90 216 378 20 44
www.gedikwelding.com